VISION GRAPHICS
LOOK GOOD. BE SEEN.

Table Drape
CAT-TBT-STD-96-4

TABLE COVER - DRAPE
8' TABLE 4-SIDED (CLOSED BACK)

☐ Finish Size: 154"W x 88"H
Safe Zone

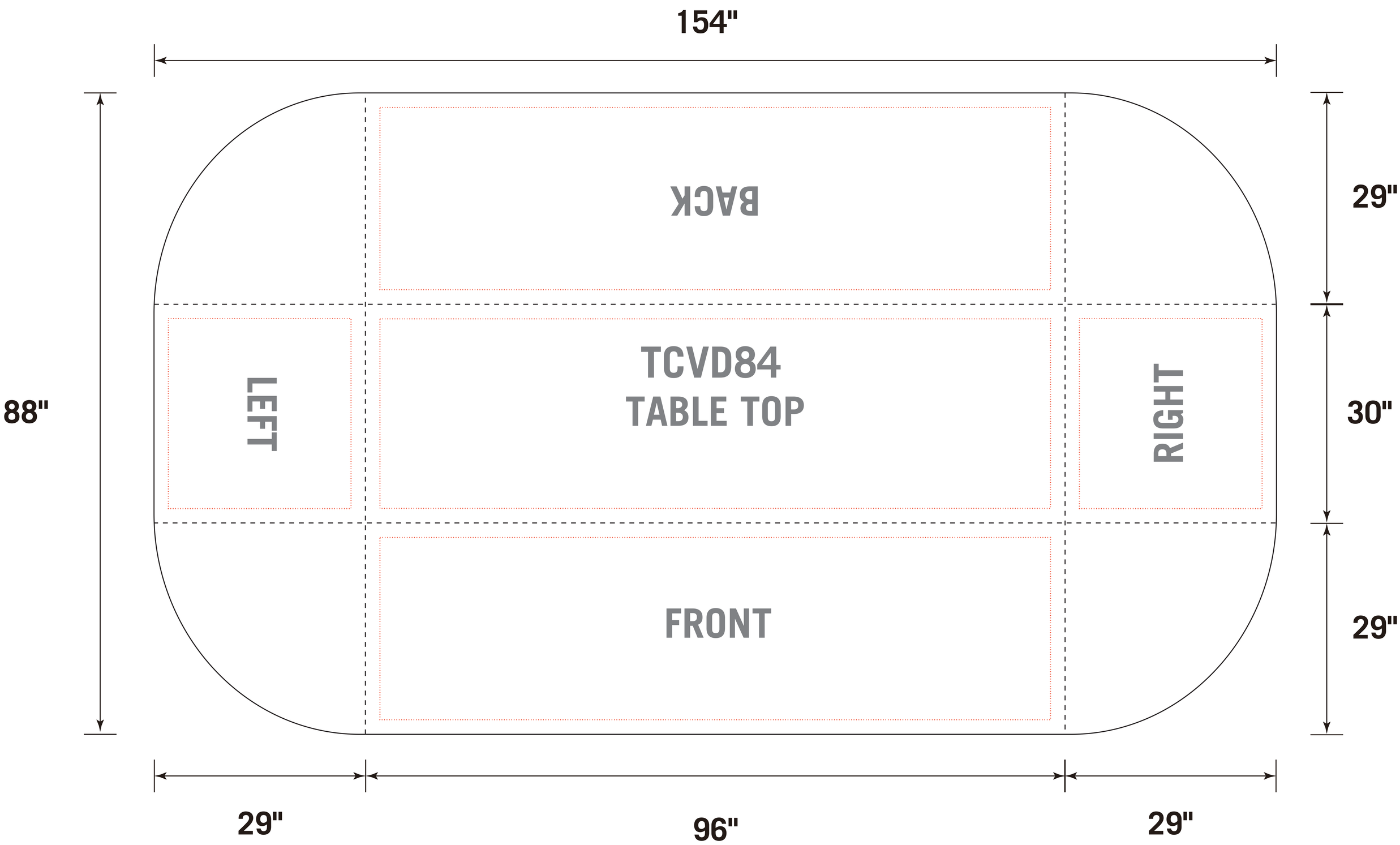

IMPORTANT!

PLEASE READ BEFORE SUBMITTING ARTWORK

- Scale 100%
- Keep your design within the ART layer only.
- DO NOT hide, delete or rename other layers.
- DO NOT resize template and/or change size or shape.
- Keep all important artwork inside the Safe Zone.
- Convert all text to outlines.
- Embed all links or provide links separately.
- Use CMYK for gradients.
- Save and send file as PDF.

CALL 801.973.8929 with any questions

2525 SOUTH 900 WEST, SALT LAKE CITY, UT 84119 • 801.973.8929 • WWW.VISIONDOESIT.COM

Revised 03/25/2022