Ogden Blue
COPY, PRINT & SIGN

Table Drape
CAT-TBT-STD-96-4

TABLE COVER - DRAPE
8' TABLE 4-SIDED (CLOSED BACK)

☐ Finish Size: 154" W x 88" H

Safe Zone

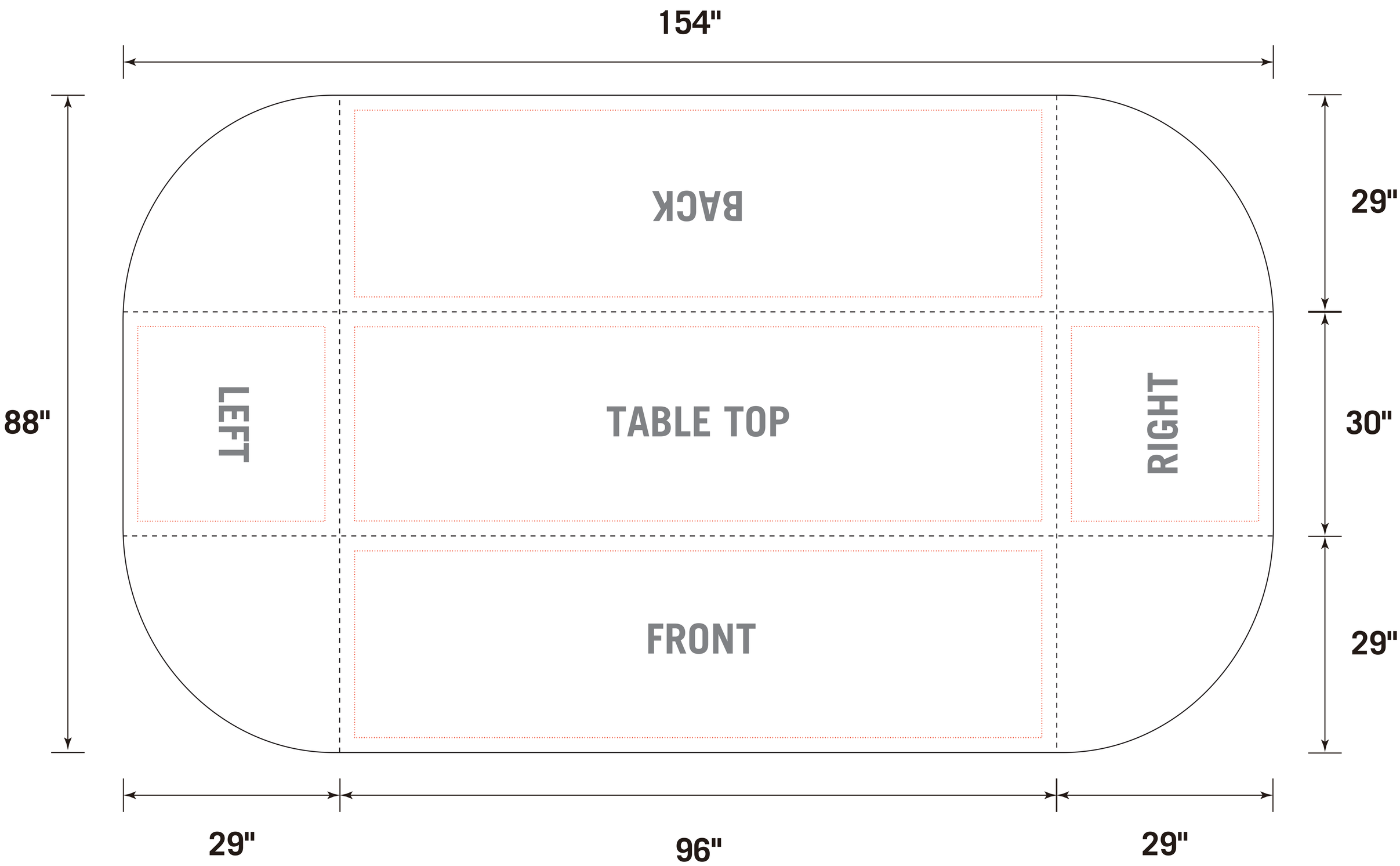

IMPORTANT!

PLEASE READ BEFORE SUBMITTING ARTWORK

- Scale 100%
- Keep your design within the ART layer only.
- DO NOT hide, delete or rename other layers.
- DO NOT resize template and/or change size or shape.
- Keep all important artwork inside the Safe Zone.
- Convert all text to outlines.
- Embed all links or provide links separately.
- Use CMYK for gradients.
- Save and send file as PDF.

CALL 801.392.7573 with any questions

1435 WALL AVE, OGDEN, UTAH 84404 · 801.392.7573 · WWW.OGDENBLUE.COM

Revised 03/25/2022