Ogden Blue
COPY, PRINT & SIGN

Table Throw Box Fitted
CAT-TBT-FTD-96-4

TABLE COVER - FITTED
8' TABLE 4-SIDED (CLOSED BACK)

- Bleed
- Finish Size: 154"W x 88"H
- Safe Zone

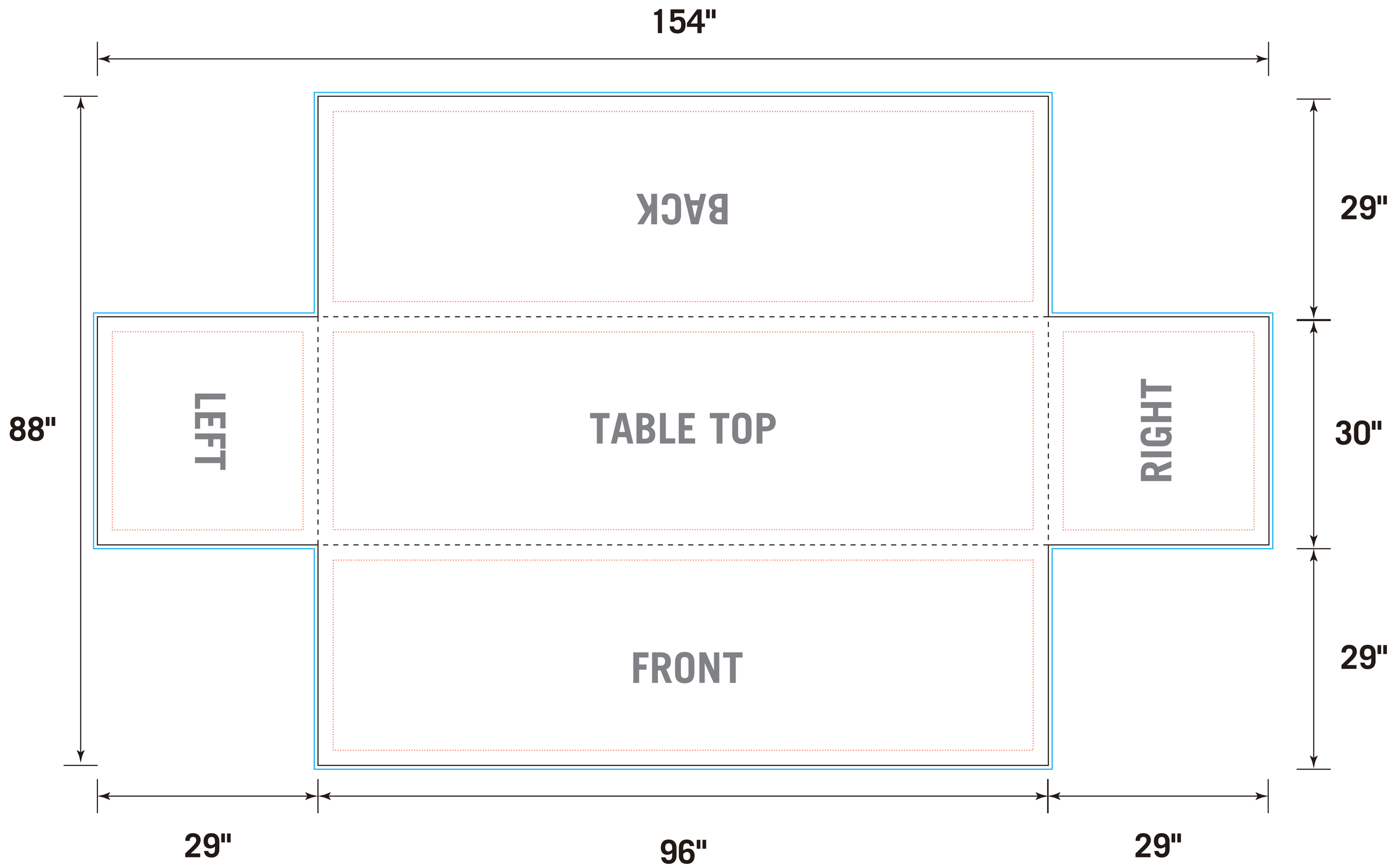

IMPORTANT!

PLEASE READ BEFORE SUBMITTING ARTWORK

- Scale 100%
- Keep your design within the ART layer only.
- Fill Bleed with artwork. Needed for finishing.
- DO NOT hide, delete or rename other layers.
- DO NOT resize template and/or change size or shape.
- Keep all important artwork inside the Safe Zone.
- Convert all text to outlines.
- Embed all links or provide links separately.
- Use CMYK for gradients.
- Save and send file as PDF.

CALL 801.392.7573 with any questions

1435 WALL AVE, OGDEN, UTAH 84404 · 801.392.7573 · WWW.OGDENBLUE.COM

Revised 03/25/2022